Practice 9 – State Feedback Gain Matrix for Rotatory Inverted Pendulum
Part B. Regulator Control Design

Abstract

One of the major concerns in control engineering is related to stability. If the system is unstable, we might be able to design a state feedback controller to stabilize it. Even if the system is stable, we may still want to regulate the performance of the system according to some design specifications (e.g., final state, rate of convergence, and settling time). These are possible if the system is controllable. By controllable, we mean that for any initial state vector x_a and any desired final state x_b, there exist a control input $u(t)$ that can steer the state of the system from x_a to x_b in finite time. In this lab, you must design a regulator control to preserve the vertical position of the rotatory inverted pendulum.

Topics Covered

- Controllability
- State feedback control
- Companion matrices.
- Pole placement control design
- Control design for higher order systems

Prerequisites

- Hardware Interfacing laboratory experiment
- Rotary Pendulum Modeling laboratory experiment

1. Introduction

The standard state space representation of a multi input multioutput (MIMO) continuous linear time invariant (LTI) system with n state variables, r input variables, and m output variables is:

$$\begin{aligned} \dot{\boldsymbol{x}}(t) &= \mathbf{A}\boldsymbol{x}(t) + \mathbf{B}\boldsymbol{u}(t) \\ \boldsymbol{y}(t) &= \mathbf{C}\boldsymbol{x}(t) + \mathbf{D}\boldsymbol{u}(t) \end{aligned} \tag{1.1}$$

where $\boldsymbol{x}(t) \in \mathcal{R}^n$ is the vector of state variables, $\boldsymbol{u}(t) \in \mathcal{R}^r$ is the control input vector, $\boldsymbol{y}(t) \in \mathcal{R}^m$ is the output vector, $\mathbf{A} \in \mathcal{R}^{n\times n}$ is the system matrix, $\mathbf{B} \in \mathcal{R}^{n\times r}$ is the input matrix, $\mathbf{C} \in \mathcal{R}^{m\times n}$ is the output matrix, and $\mathbf{D} \in \mathcal{R}^{m\times r}$ is the direct transmission matrix.

The state feedback control of a system is shown in Fig. 1.1. Let $\boldsymbol{u}(t)$ be a state feedback control law of the form:

$$\boldsymbol{u}(t) = -\mathbf{K}\boldsymbol{x}(t) \tag{1.2}$$

where $\mathbf{K} \in \mathcal{R}^{m\times n}$ is the state feedback gain matrix. Applying this to Eq. 1.1 gives the closed loop system:

$$\begin{aligned} \dot{\boldsymbol{x}}(t) &= \mathbf{A}\boldsymbol{x}(t) - \mathbf{B}\mathbf{K}\boldsymbol{x}(t) \\ \dot{\boldsymbol{x}}(t) &= (\mathbf{A} - \mathbf{B}\mathbf{K})\boldsymbol{x}(t) \end{aligned} \tag{1.3}$$

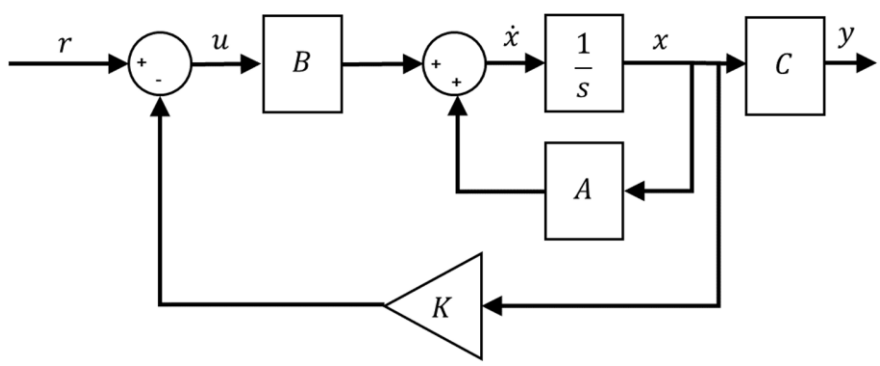

Fig. 1.1: State feedback block diagram.

The state vector $\boldsymbol{x}(t)$ of the rotary pendulum system is defined:

$$\boldsymbol{x}(t) = [\theta(t) \quad \alpha(t) \quad \dot{\theta}(t) \quad \dot{\alpha}(t)]^{\mathrm{T}} \tag{1.4}$$

The reference signal includes the desired rotary arm position, $\theta_r(t)$ and is defined:

$$\boldsymbol{x}_{\boldsymbol{ref}}(t) = [\theta_r(t) \quad 0 \quad 0 \quad 0]^{\mathrm{T}} \tag{1.5}$$

and the control strategy used to balance the pendulum (and track the rotary arm setpoint) is:

$$\begin{aligned} \boldsymbol{u}(t) &= \mathbf{K}\left[\boldsymbol{x}_{\boldsymbol{ref}}(t) - \boldsymbol{x}(t)\right] \\ \boldsymbol{u}(t) &= k_{p,\theta}[\theta_r(t) - \theta(t)] - k_{p,\alpha}\alpha(t) - k_{d,\theta}\dot{\theta}(t) - k_{d,\alpha}\dot{\alpha}(t) \end{aligned} \tag{1.6}$$

To verify if the system is controllable, we can compute the rank of the Controllability matrix $\boldsymbol{Q_c}$:

$$\boldsymbol{Q_c} = [\mathbf{B} \quad \mathbf{AB} \quad \mathbf{A^2B} \quad \cdots \quad \mathbf{A^{n-1}B}]^{\mathrm{T}} \tag{1.7}$$

where n is the dimension of the state vector $\boldsymbol{x}(t)$. Then, we say that the linear system Eq. 1.1 or, equivalently, the pair $(\mathbf{A}, \mathbf{B})$ is controllable if and only if $rank\ (\boldsymbol{Q_c}) = n$. Otherwise, we conclude that the linearized system (or, in other words, the pair $(\mathbf{A}, \mathbf{B})$) is uncontrollable.

If the system is controllable, we can use the state feedback to place the poles at desired locations, i.e. in the left half of the s plane. Thus, we can find a gain $\mathbf{K}$ for the closed loop system in Eq. 1.3 to obtain a desired characteristic equation. Here, the following four methods are useful to determine the state feedback gain matrix $\mathbf{K}$:

1. Transformation matrix $\mathbf{T}$
2. Direct substitution method
3. Companion Matrix
4. Ackerman's formula

In this lab, you must use the Companion Matrix Method, which stablishes that if the system $(\mathbf{A}, \mathbf{B})$ is controllable with a single input system, i.e. $\mathbf{B} \in \mathcal{R}^{n\times 1}$, then $\mathbf{A}$ is similar to a companion matrix. Let the characteristic equation of $\mathbf{A}$ be:

$$s^n + a_n s^{n-1} + \cdots + a_2 s^1 + a_1 \quad = \quad 0 \tag{1.8}$$

where $a_i \in \mathcal{R}$ for $i \in \{1,2,\cdots,n\}$. Then the companion matrices of $\mathbf{A}$ and $\mathbf{B}$ are:

$$\widetilde{\mathbf{A}} \quad = \quad \begin{bmatrix} 0 & 1 & \cdots & 0 & 0 \\ 0 & 0 & \cdots & 0 & 0 \\ \vdots & \vdots & \ddots & \vdots & \vdots \\ 0 & 0 & \cdots & 0 & 1 \\ -a_1 & -a_2 & \cdots & -a_{n-1} & -a_n \end{bmatrix} \tag{1.9}$$

and

$$\widetilde{\mathbf{B}} \quad = \quad \begin{bmatrix} 0 \\ \vdots \\ 0 \\ 1 \end{bmatrix} \tag{1.10}$$

The companion matrices can be found using the matrix transformation:

$$\mathbf{W} \quad = \quad \mathbf{T}\widetilde{\mathbf{T}}^{-1} \tag{1.11}$$

where $\widetilde{\mathbf{T}}$ is the controllability matrix $\boldsymbol{Q_c}$ defined in Eq.1.7 and:

$$\widetilde{\mathbf{T}} \quad = \quad [\widetilde{\mathbf{B}} \quad \widetilde{\mathbf{A}}\widetilde{\mathbf{B}} \quad \cdots \quad \widetilde{\mathbf{A}}^{n-1}\widetilde{\mathbf{B}}] \tag{1.12}$$

Then,

$$\widetilde{\mathbf{A}} \quad = \quad \mathbf{W}^{-1}\mathbf{A}\mathbf{W} \tag{1.13}$$

and

$$\widetilde{\mathbf{B}} \quad = \quad \mathbf{W}^{-1}\mathbf{B} \tag{1.14}$$

Therefore, the procedure to design the state feedback gain matrix $\mathbf{K}$ for a controllable $(\mathbf{A}, \mathbf{B})$ system can be generalized as follows:

Step 1. Find the characteristic equation of the system using $\mathbf{det}(s\mathbf{I} - \mathbf{A})$**.**

Step 2. Compute the control gain, $\widetilde{\mathbf{K}}$, that assigns the poles of $\widetilde{\mathbf{A}} - \widetilde{\mathbf{B}}\widetilde{\mathbf{K}}$ to the desired locations.

Step 2.1. Find the companion matrices $\widetilde{\mathbf{A}}$ and $\widetilde{\mathbf{B}}$.
Step 2.2. Obtain the desired polynomial considering the required performance indexes.
Step 2.2. Apply the state feedback control gain matrix $\widetilde{\mathbf{K}}$ to the companion matrix $(\widetilde{\mathbf{A}}, \widetilde{\mathbf{B}})$.
Step 2.2. Find the control gain, $\widetilde{\mathbf{K}}$.

Step 3. Find $\mathbf{K} = \widetilde{\mathbf{K}}\mathbf{W}^{-1}$ to get the state feedback gain for the original system $(\mathbf{A}, \mathbf{B})$.

Step 3.1. Find the controllability matrix $\mathbf{T}$ for the original system $(\mathbf{A}, \mathbf{B})$.
Step 3.2. Obtain the controllability matrix $\widetilde{\mathbf{T}}$ for the companion matrices $(\widetilde{\mathbf{A}}, \widetilde{\mathbf{B}})$.
Step 3.3. Compute the $\mathbf{W}$ matrix.
Step 2.2. Find the control gain, $\mathbf{K}$.

Remark 1: It is important to do the $\widetilde{\mathbf{K}} \rightarrow \mathbf{K}$ conversion. Remember that $(\mathbf{A}, \mathbf{B})$ represents the actual system while the companion matrices $\widetilde{\mathbf{A}}$ and $\widetilde{\mathbf{B}}$ do not.

Remark 2: During the previous lab practice P9. State Feedback Gain Matrix for Inverted Pendulum Part A, you derive the linear time invariant state space representation for the Pendulum DOWN / Crane Configuration; however, in this lab practice, you will use the Rotary Inverted Pendulum Configutation, Fig. 1.1, with the following the linear time invariant state space model:

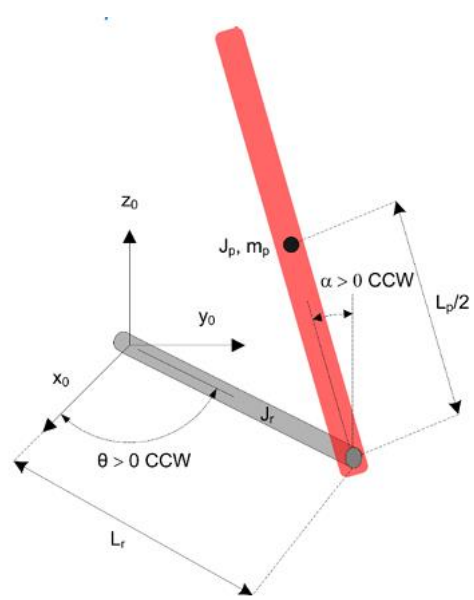

Fig. 1.1: Rotary pendulum model in Inverted Configuration.

$$\begin{bmatrix}\dot{x}_1(t)\\ \dot{x}_2(t)\\ \dot{x}_3(t)\\ \dot{x}_4(t)\end{bmatrix} = \begin{bmatrix} 0 & 0 & 1 & 0 \\ 0 & 0 & 0 & 1 \\ 0 & \frac{m_p^2 l^2 r g}{J_t} & -\frac{J_p b_r}{J_t} - \frac{J_p \frac{{k_m}^2}{R_m}}{J_t} & -\frac{m_p l r b_p}{J_t} \\ 0 & \frac{m_p g l J_r}{J_t} & -\frac{m_p l r b_r}{J_t} - \frac{m_p r l \frac{{k_m}^2}{R_m}}{J_t} & -\frac{J_p b_p}{J_t} \end{bmatrix} \begin{bmatrix}x_1(t)\\ x_2(t)\\ x_3(t)\\ x_4(t)\end{bmatrix} + \begin{bmatrix} 0 \\ 0 \\ \frac{J_p k_m}{J_t R_m} \\ \frac{m_p r l k_m}{J_t R_m} \end{bmatrix} [v_m(t)]$$

$$\begin{bmatrix}y_1(t)\\ y_2(t)\end{bmatrix} = \begin{bmatrix} 1 & 0 & 0 & 0 \\ 0 & 1 & 0 & 0 \end{bmatrix} \begin{bmatrix}x_1(t)\\ x_2(t)\\ x_3(t)\\ x_4(t)\end{bmatrix} + \begin{bmatrix} 0 \\ 0 \end{bmatrix} [v_m(t)]$$

Remark 1: Table 1.1 contains the rotatory pendulum parameters of the Quanser Qube 3.

Table 1.1: Quanser Qube 3 pendulum system parameters.

Symbol	Parameter	Value
R_m	Terminal resistance	7.5 [Ω]
k_t	Torque constant	0.0422 [N m/A]
k_m	Motor back-emf constant	0.0422 [V/(rad/s)]
m_r	Rotary arm mass	0.095 [kg]
r	Rotary arm length (pivot to the end of the metal rod)	0.085 [m]
b_r	Rotary arm viscous damping	1.0×10^{-3} [N m/(rad/s)]
J_r	Rotary arm moment of inertia $J_r = \frac{m_r r^2}{3}$	2.2879×10^{-4}[kg m^2]
m_p	Pendulum link mass	0.024 [kg]
L_p	Pendulum link length	0.129 [m]
b_p	Pendulum viscous damping	5.0×10^{-5} [N m/(rad/s)]
J_p	Pendulum moment of inertia $J_p = \frac{m_p L_p^2}{3}$	1.3313×10^{-4}[kg m^2]
l	Half of the pendulum link length $l = \frac{L_p}{2}$	0.0645 [m]

2. Development

D.1 In this Lab Practice, you must use the Quanser® Qube Servo 3 – Pendulum under the following time domain specifications when the pendulum is balanced and tracking a rotary arm setpoint:

$$\begin{aligned} \%MP &= 6.81\% \\ t_{ss} &= 1.54\ [\text{sec}] \end{aligned}$$

D.2 Based on the performance index specifications, find the location of the two dominant poles.

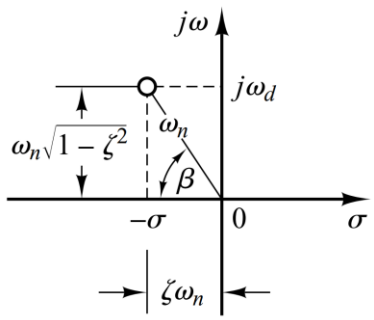

Fig. 2.1 Desired location of poles $(\boldsymbol{p_{1,2} = \sigma \pm j\omega_d})$.

D.3 Using the code *QuanserLabs_MR3003_Practice9_PartB_Script_CDSotelo.m*, follow the instructions below to establish the state space model that will be controlled:

i. In *"Step 1"* of the code, program the State Space Representation matrices of the Rotary pendulum model in Inverted Configuration.

ii. In *"Step 2"* of the code, verify if the system is controllable using the controllability matrix.

D.4 In *"Step 3"* of *QuanserLabs_MR3003_Practice9_PartB_Script_CDSotelo.m*. Matlab® code, enter the state feedback gain matrix. Follow the instructions below to obtain the corresponding values:

i. Find the characteristic equation of the system using $\det(s\mathbf{I} - \mathbf{A})$.

ii. Compute the control gain, $\widetilde{\mathbf{K}}$, that assigns the poles of $\widetilde{\mathbf{A}} - \widetilde{\mathbf{B}}\widetilde{\mathbf{K}}$ to the desired locations.
Find the companion matrices $\widetilde{\mathbf{A}}$ and $\widetilde{\mathbf{B}}$
Obtain the desired polynomial considering the required performance indexes.

***Hint:** As it can be seen, the required specifications correspond to a transient response characteristics of a second order system; nevertheless, our system is fourth order. For this reason, two poles, $p_3 = 40$ and $p_4 = 45$, must be added and multiplied by the dominant poles, p_1 and p_2 found; this, to obtain characteristic equation of the desired polynomial.

$$desired\ polynomial = (s + p_1) * (s + p_2) * (s + p_3) * (s + p_4)$$

Apply the state feedback control gain matrix $\widetilde{\mathbf{K}}$ to the companion matrix $(\widetilde{\mathbf{A}}, \widetilde{\mathbf{B}})$.
Find the control gain, $\widetilde{\mathbf{K}}$.

iii. Find $\mathbf{K} = \widetilde{\mathbf{K}}\mathbf{W}^{-1}$ to get the state feedback gain for the original system $(\mathbf{A}, \mathbf{B})$.
Find the controllability matrix $\mathbf{T}$ for the original system $(\mathbf{A}, \mathbf{B})$.
Obtain the controllability matrix $\widetilde{\mathbf{T}}$ for the companion matrices $(\widetilde{\mathbf{A}}, \widetilde{\mathbf{B}})$.
Compute the $\mathbf{W}$ matrix.
Find the control gain, $\mathbf{K}$.

D.5 Open the *QuanserLabs_MR3003_Practice9_PartB_CDSotelo.slx* Simulink® model shown in Fig. 1.2:

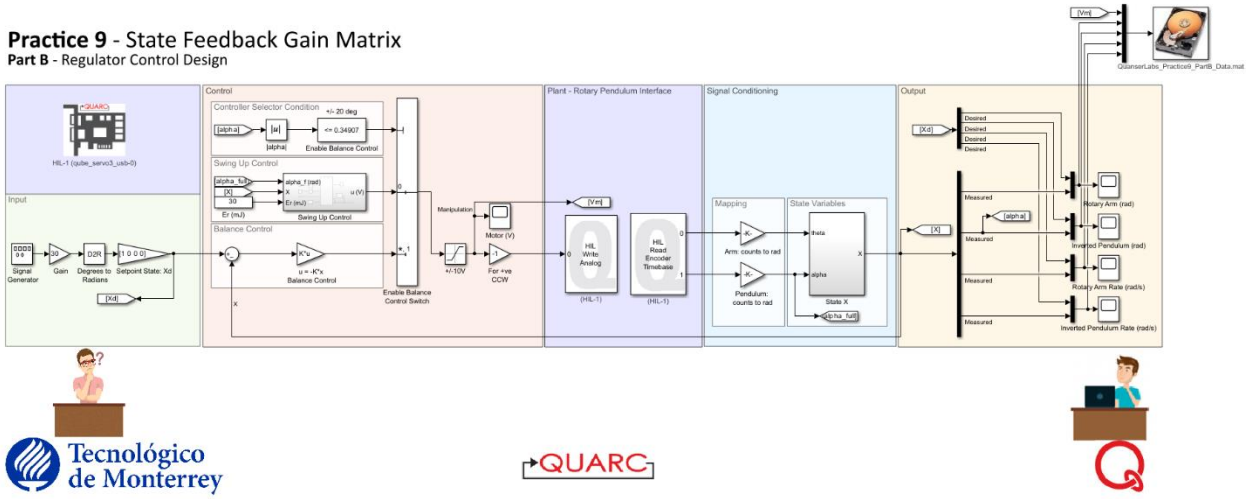

Fig. 2.2: Quanser® Quabe Servo 3 in the Rotatory Pendulum balance controller.

Note: The output scopes display the responses of the rotary arm angle and rate, and the inverted pendulum angle and rate, of the Qube Servo 3.

Then, verify the following considerations in your Simulink® model:

- In the Mapping section, located at Signal Conditioning stage, the angles from the Counts to Rad subsystem is added for the rotatory arm and for the inverted pendulum.
- In the Mapping section, located at Signal Conditioning stage, high pass filters $50s/(s+50)$ are used to compute the velocities $\dot{\theta}(t)$ and $\dot{\alpha}(t)$.
- In the Balance control section, located at Control stage, the Gain block to implement the state feedback control gain given in Eq. 1.6 is added. Since the control gain is a vector, make sure the gain block is configured to do matrix type multiplication.
- In the Swing Up Control section, located at Control stage, a subsystem is used to put the pendulum in vertical position automatically.
- In the Input stage, the Signal Generator block is added in order to generate a varying, desired arm angle (Type=Square, Amplitude=1, Frequency=0.0625 Hz). To generate a reference state, make sure you include a Gain block of $[\theta(t) \quad 0 \quad 0 \quad 0]$.
- In the Input stage, the Gain block is set the to 30 to make the arm angle go between $\pm 30°$.

Then, follow the instructions below to validate your control regulator system designed in D.3:

i. Set the Gain block of $[0 \quad 0 \quad 0 \quad 0]$
ii. Use a state feedback gain of $\mathbf{K} = [-2 \quad 50 \quad -1 \quad 3]$, to observe how are the responses.
iii. Run for 10 sec the QUARC® controller. Using the default **K** values, you must obtain:

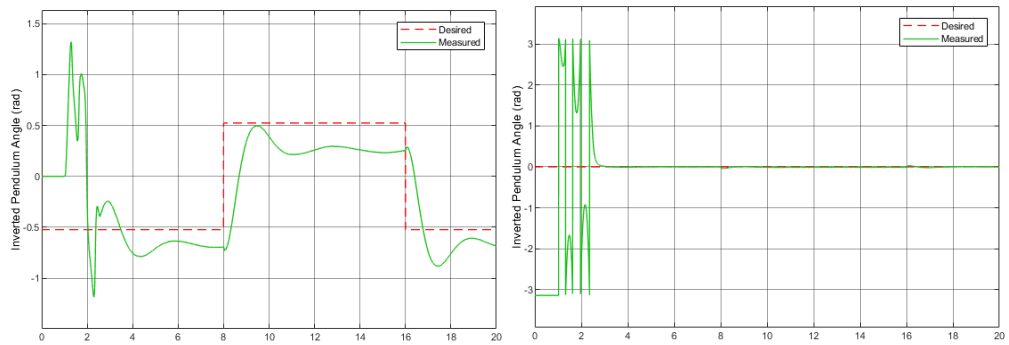

a) b)

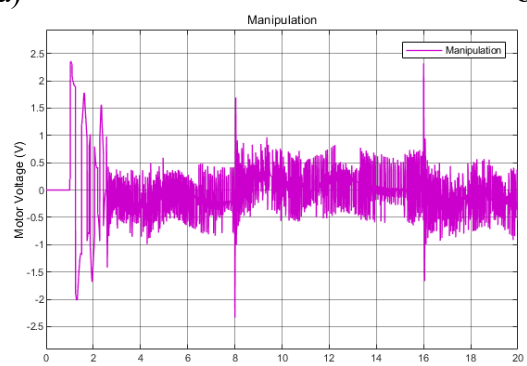

c)

Fig. 2.3: Quanser® Quabe Servo 3 example rotary pendulum response using default gain.

iv. Use your state feedback gain of **K** in D.3, to observe how are the responses.

D.6 Does the rotary arm and pendulum response match the settling time and percent overshoot specifications? If not, give one reason why there is a discrepancy?

3. Report

R.1 According to D.2, which are the desired poles based on the required performance index specifications?

R.2 Based on D.3, present the state space representation of the Rotary pendulum model in Inverted Configuration and the corresponding computations needed to verify if the system can be controlled.

*__Note:__ Add your Matlab® code used.

R.3 Based on D.4, enter the state feedback gain matrix computed by the Companion Method.

*__Note:__ Add your Matlab® code used to compute these values.

R.4 Considering D.5, generate plots for the controlled rotary arm response $\theta(t)$ and pendulum response $\alpha(t)$ using the MATLAB script commands and the saved data in the *.MAT files.

*__Note:__ Add your Matlab® code used to compute this value.

R.5 Conclusions.